Furnizor: **Sc Trivolt Distribution SRL**
Reg. com.: J23/3300/2016
CIF: RO36421140
Adresa: Strada Apusului nr 3 (primul sens giratoriu Tehodor Pallady-Autostrada Soarelui), Catelu, Ilfov
Banca: BRD
IBAN: RO34BRDE441SV13182234410

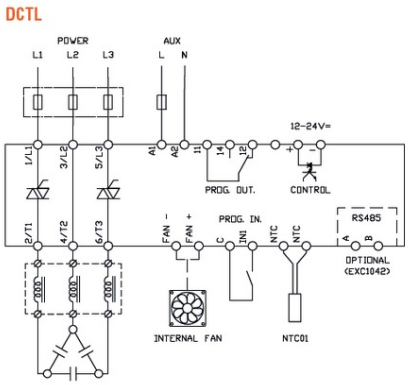

LOVATO THYRISTOR MODULE, 7.5KVAR AT 400VAC, RATED OPERATING TENSIUNE 400VAC, WITH CURRENT CONTROL

THYRISTOR MODULE, 7.5KVAR AT 400VAC, RATED OPERATING tensiune 400VAC, WITH CURRENT CONTROL
Pret: 3 499,10 lei (TVA inclus)

Detalii online: https://www.materialeelectrice.ro/thyristor-module-7-5kvar-at-400vac-rated-operating-tensiune-400vac-with-current-control-127398